DTC	C0273/13	Open in ABS Motor Relay Circuit

DTC	C0274/14	Short to B+ in ABS Motor Relay Circuit

DESCRIPTION

The ABS motor relay supplies power to the ABS pump motor. While the ABS is activated, the ECU switches the motor relay on and operates the ABS pump motor.
If the voltage supplied to the motor relay (+BM) is below the DTCs detection threshold due to battery / alternator shortage, the DTCs may be stored.

DTC No.	DTC Detecting Condition	Trouble Area
C0273/13	Relay contact is off for 1 second or more during initial check (motor relay is ON).	• ABS motor relay • ABS motor relay circuit • Brake actuator assembly
C0274/14	Internal motor relay contact is on for 1 second or more when the motor is inoperative (motor relay is OFF).	• ABS motor relay • ABS motor relay circuit • Brake actuator assembly

WIRING DIAGRAM

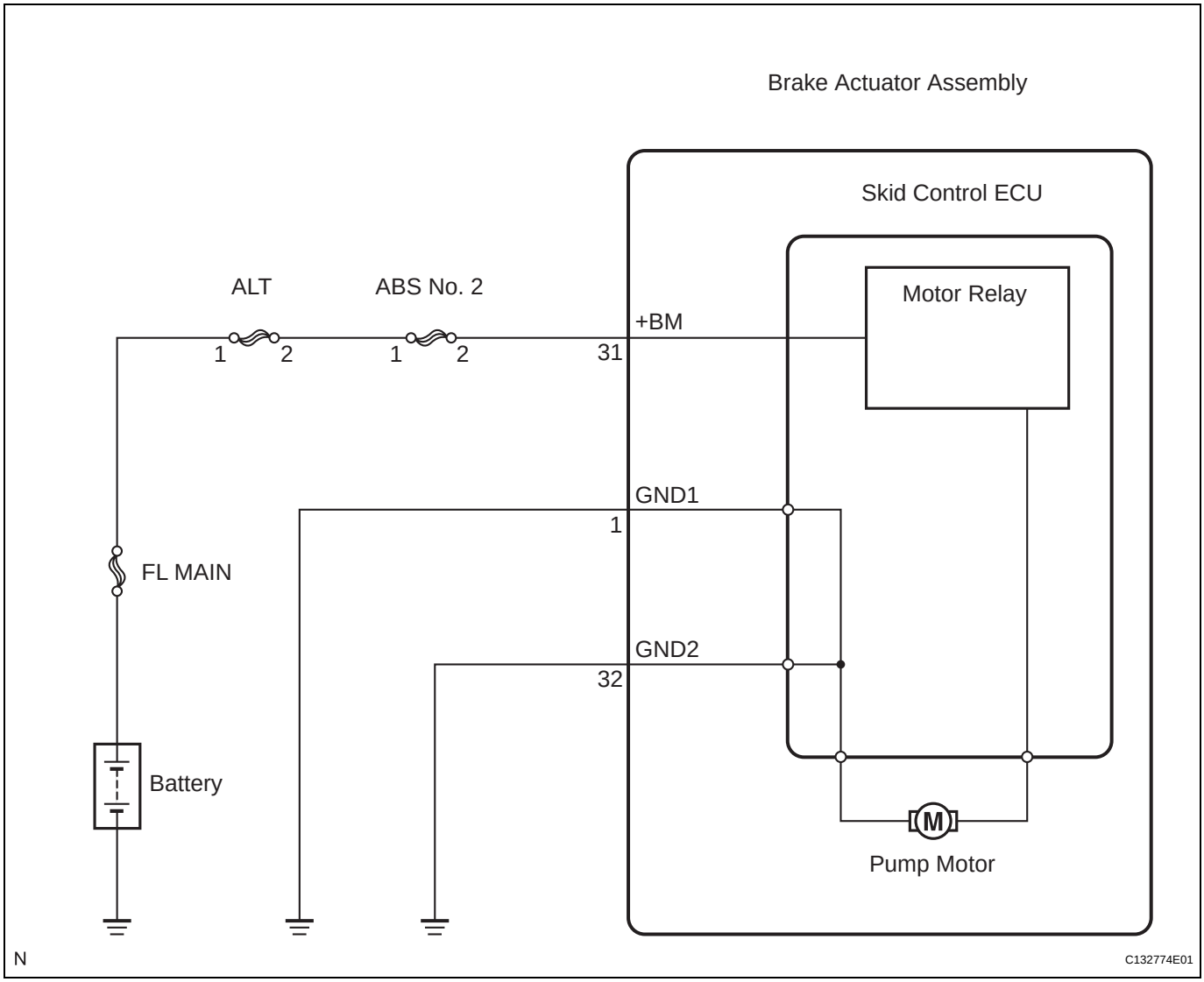

cardiagn.com

INSPECTION PROCEDURE

1	PERFORM ACTIVE TEST BY INTELLIGENT TESTER (ABS MOTOR RELAY)

(a) Connect the intelligent tester to the DLC3.
(b) Start the engine.
(c) Select the ACTIVE TEST mode on the intelligent tester.
(d) Check the operation sound of the ABS motor individually when operating it with the intelligent tester.

Item	Vehicle Condition / Test Details	Diagnostic Note
ABS MOT RELAY	Turns ABS motor relay ON / OFF	Operation sound of motor can be heard

OK:
The operation sound of the ABS motor should be heard.

NG → **Go to step 2**

OK

REPLACE BRAKE ACTUATOR ASSEMBLY

2	INSPECT ABS NO. 2 FUSE

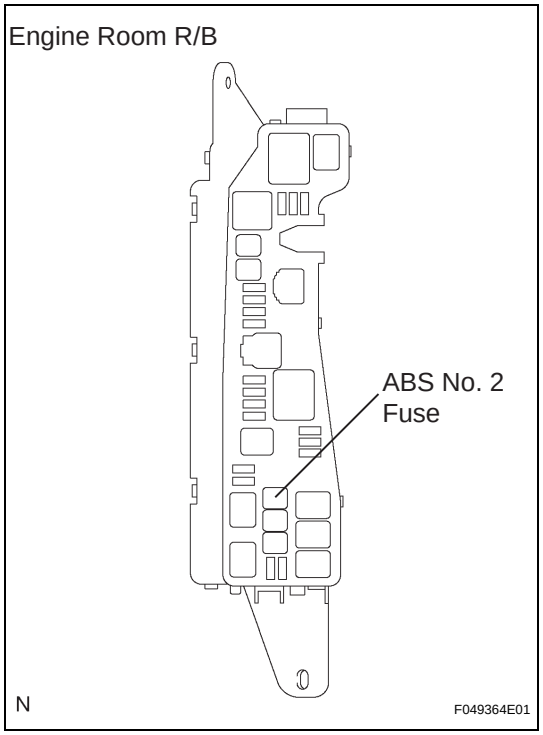

(a) Remove the ABS No. 2 fuse from the engine room R/B.
(b) Measure the resistance according to the value(s) in the table below.
Standard resistance

Tester Connection	Specified Condition
ABS No. 2 fuse	Below 1 Ω

NG → **REPLACE ABS NO. 2 FUSE**

OK

cardiagn.com

3 INSPECT SKID CONTROL ECU (+BM TERMINAL)

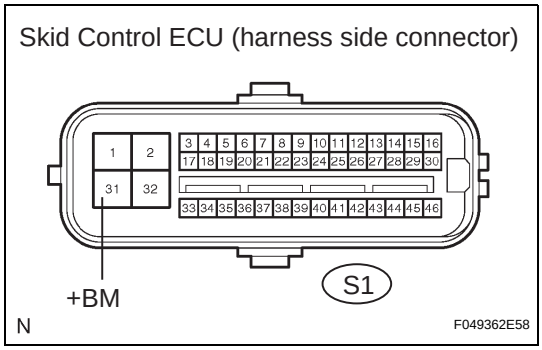

(a) Disconnect the skid control ECU connector.
(b) Measure the voltage according to the value(s) in the table below.

Standard voltage

Tester Connection	Condition	Specified Condition
S1 - 31 (+BM) - Body ground	Always	10 to 14 V

NG → **REPAIR OR REPLACE HARNESS OR CONNECTOR (+BM CIRCUIT)**

OK

4 INSPECT SKID CONTROL ECU (GND TERMINAL)

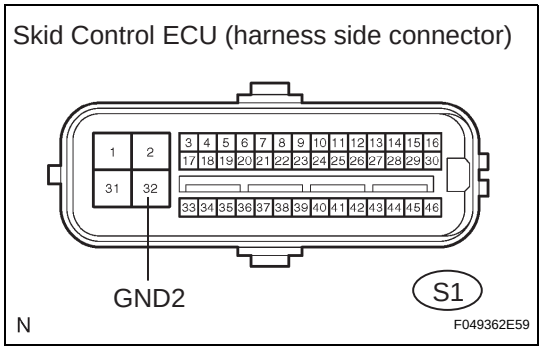

(a) Disconnect the skid control ECU connector.
(b) Measure the resistance according to the value(s) in the table below.

Standard resistance

Tester Connection	Specified Condition
S1 - 32 (GND2) - Body ground	Below 1 Ω

NG → **REPAIR OR REPLACE HARNESS OR CONNECTOR (GND CIRCUIT)**

OK

5 RECONFIRM DTC

(a) Clear the DTCs (See page BC-13).
(b) Drive the vehicle at a speed of 4 mph (6 km/h) or more.
(c) Are the same DTCs recorded? (See page BC-13)
HINT:
The skid control ECU inspects the motor relay circuit when the stop light switch is turned off and the vehicle is running at a speed of 4 mph (6 km/h) or more.

NO → **END**

YES

REPLACE BRAKE ACTUATOR ASSEMBLY

cardiagn.com